Dart Hawkesbury
1270 Aberdeen St
Hawkesbury, ON
K6A 1K7
Canada

Tel (613) 632-5200

646.9502

Job Sheet 165975

Part No: 646.9502 **Job Qty:** 1 ea

Part Name: 206A/B/L-Series Cable Cutter System, Low

Part Weight: 0 lbs **Status:** Scheduled **Priority:** Medium

Job Created: 9/30/17 **Job Tracking No:**

Due Date: 10/31/17 **Created By:** Mario Poulin

Type: Stock **Description:**

Customer: **L3 Army Fleet Support LLC** (*CARMY01*)

Army Fleet Support Cairns Field Bldg 30300 Specker Street Fort Rucker, AL, 36362 USA ph:(334) 255-8373

Note: DWG REV N/C IPP REV:A 12.08.28 NEW ISSUE DD VERF:JLM

Ship Via:

Bill of Materials

Part/Part Name	Part Note	Serial No	Quantity	Location
646.9502 206A/B/L-Series Cable Cutter System, Low	DWG REV N/C IPP REV:A 12.08.28 NEW ISSUE DD VERF:JLM		0.000	
600.0990 Magnabond 6398 Part A Size 112 ml			0.000	
600.0991 Magnabond 6398 Part B Size 112 ml			0.000	
600.1012 Sealant PR1425B2 (#654 sem)			0.000	
646.9601 Upper Cutter Assembly	DWG REV N/C IPP REV:A 12.08.13 NEW ISSUE DD VERF:JFS		0.000	
646.9603 Lower Cutter Assembly Low	DWG REV N/C IPP REV:A 12.08.13 NEW ISSUE DD VERF:JFS		0.000	
646.9810 Deflector	DWG REV A SHEETS 1,2,3 IPP REV:A NEW ISSUE 13/04/01 JFS VERIFIED BY:DD		0.000	
646.9910 Struts	DWG REV N/C IPP REV:A NEW ISSUE 12-09-19 JLM VERIFIED BY:DD		0.000	
647.0110 Roof Doubler	DWG REV A1 IPP REV:A 12.08.14 NEW ISSUE DD VERF:JFS		0.000	
647.0111 Panel	DWG REV A1 SHEET 2 IPP REV:A 12.08.14 NEW ISSUE DD VERF:JFS		0.000	
647.0112 Strut Bracket	DWG REV A SHEET 3 IPP REV:A 12.08.14 NEW ISSUE DD VERF:JFS		0.000	
647.0113 Strut Doubler	DWG REV A1 SHEET 4 IPP REV:A 12.08.14 NEW ISSUE DD VERF:JFS		0.000	
647.0114 Clip	DWG REV A1 SHEET 5 IPP REV:A 12.08.14 NEW ISSUE DD VERF:JFS IPP REV:B 13.09.10 NOW MADE AT GFI DD VERF:JLM		0.000	
647.0115 Clip	DWG REV A1 SHEET 5 IPP REV:A 12.08.14 NEW ISSUE DD VERF:JFS IPP REV:B 13.09.10 NOW MADE AT GFI DD VERF:JLM		0.000	
647.0116 Doubler	DWG REV A1 SHEET 6 IPP REV:A 12.08.14 NEW ISSUE DD VERF:JFS		0.000	
647.0210 Rail	DWG REV N/C IPP REV:A NEW ISSUE 12/10/02 JFS VERIFY BY: DD		0.000	
647.0310 Channel	DWG REV N/C IPP REV: A NEW ISSUE 12/09/18 JFS VERIFY BY DD		0.000	
647.0410 Tube	DWG REV N/C IPP REV:A 12.09.18 NEW ISSUE DD VERF:JLM		0.000	

DART AEROSPACE

Dart Aerospace Ltd.
1270 Aberdeen Street
Hawkesbury, ON K64 1K7
CANADA
TEL.: 1 613 632–5200
Email: sales@dartaero.com
www.dartaerospace.com

S035186

206A/B/L – Series Cable Cutter System, Low

PART NO: 646.9502
Original Serial #: S035186
Revision:
Operation: Start up Operation
Change No:

Date: 01/25/18
Job No: 165975

647.1210 Screen	DWG REV N/C IPP REV:A 12.08.14 NEW ISSUE DD VERF:JFS	0.000
AN3-10A Bolt		0.000
AN3-11A Bolt		0.000
AN3-3A Bolt		0.000
AN743-13 Bracket		0.000
CCR264SS-3-06 Rivet		0.000
CCR264SS3-04 Rivet		0.000
CCR264SS3-2 Rivet, Cherry		0.000
CR3212-4-4 Cherry Rivet		0.000
CR3212-5-4 Cherry Rivet		0.000
CR3213-4-05 Rivet		0.000
CR3213-4-1 Cherry Rivet		0.000
CR3213-4-2 Cherry Rivet		0.000
CR3213-4-3 Rivet, Cherry		0.000
CR3213-4-4 Rivet, Cherry		0.000
CR3213-4-6 Rivet		0.000
MS21042-08 Use Ms21042L08		0.000
MS21042-3 Nut		0.000
MS21047-3 Nut Plate		0.000
MS21059-3 Nut Plate		0.000
MS21059L08 Nut		0.000
MS24694-S8 Screw		0.000
MS27039-08-06 Screw	DWG REV PA6	0.000
MS27039-08-09 Screw		0.000
MS27039-08-11 Screw		0.000
MS27039-08-12 Screw		0.000
MS27039-08-13 Screw		0.000
MS27039-1-08 Screw		0.000
MS27039-1-11 Screw		0.000
MS35842-11 Hose Clamp		0.000
NAS1149F0332P Washer		0.000
NAS1149FN832P Washer		0.000
NAS1835-08 Insert		0.000

Job Routing

Op No	Operation	Qty	Due Date	Standard Setup hrs	Standard Run Hrs	Workcenter / Supplier	Lead Time
90	**Start up Operation**	1 Ea	10/31/17	0.00	0.00	Start up container	JAN 25 2018
100	**DC**	1 pcs	10/31/17	0.00	0.00	DC	
110	**Packaging**	1 pcs	10/31/17	0.00	0.00	Packaging1	
120	**QC**	1 pcs	10/31/17	0.00	0.00	QC4	
130	**Packaging**	1 pcs	10/31/17	0.00	0.00	Packaging3	
140	**QC21-FG**	1 Ea	10/31/17	0.00	0.00	QC21	

Part Op **100** - Photocopy bluefile & type labels per PPP 646.9502
Descriptions: **130** - Identify and pack for shipping as per PPP 646.9502 Location :FG101

JAN 30 2016

Job Allocations

Operation	Component Part	Required	Inventory	Allocated	Std Qty
90-Start up Operation	600.0990	1	0	0	0
	600.0991	1	0	0	0
	600.1012	1	0	0	0
	646.9601	1	0	0	0
	646.9603	1	0	0	0
	646.9810	1	0	0	0
	646.9910	4	0	0	0
	647.0110	1	0	0	0
	647.0111	1	0	0	0
	647.0112	8	0	0	0
	647.0113	2	0	0	0
	647.0114	1	0	0	0
	647.0115	1	0	0	0
	647.0116	2	0	0	0
	647.0210	1	0	0	0
	647.0310	2	0	0	0
	647.0410	1	0	0	0
	647.1210	1	0	0	0
	AN3-10A	8	0	0	0
	AN3-11A	8	0	0	0
	AN3-3A	1	0	0	0
	AN743-13	1	0	0	0
	CCR264SS-3-06	8	0	0	0
	CCR264SS3-04	12	0	0	0
	CCR264SS3-06	4	0	0	0
	CR3212-4-4	1	0	0	0
	CR3212-5-4	8	0	0	0
	CR3213-4-05	26	0	0	0
	CR3213-4-1	14	0	0	0
	CR3213-4-2	18	0	0	0
	CR3213-4-3	18	0	0	0
	CR3213-4-4	19	0	0	0
	CR3213-4-6	20	0	0	0
	MS21042-08	54	0	0	0
	MS21042-3	17	0	0	0
	MS21047-3	6	0	0	0
	MS21059-3	2	0	0	0
	MS21059L08	4	0	0	0
	MS24694-S8	5	0	0	0
	MS27039-08-06	4	0	0	0
	MS27039-08-09	4	0	0	0
	MS27039-08-11	43	0	0	0
	MS27039-08-12	2	0	0	0
	MS27039-08-13	6	0	0	0
	MS27039-1-08	5	0	0	0
	MS27039-1-11	5	0	0	0
	MS35842-11	1	0	0	0
	NAS1149F0332P	62	0	0	0
	NAS1149FN832P	111	0	0	0
	NAS1835-08	4	0	0	0

Part Specifications

Specifications could not be found.

Plex 10/2/17 1:31 PM Dart.lajeunesse:marie

Work Order ID 165975

Wednesday, September 06, 2017 3:12:39 PM

165975

Item ID: 646.9502 **Accept** *N900040100* **Setup Start** *NS1*

Revision ID: **Stop** *NS2*

Item Name: 206A/B/L-Series Cable Cutter System, Low

Start Date: 9/6/2017 **Start Qty:** 1.00 *1* **Cust Item ID:**

Required Date: 9/13/2017 **Req'd Qty:** 1.00 *1* **Customer:**

Reference:

Approvals: **Process Plan:** DAS 21 **Date:** SEP 0 6 2017 **Tooling:** _____ **Date:** _____ **Run Start** *NR1*

QC: 9-89 **Date:** _____ **SPC (Y/N):** _____ **Date:** _____ **Stop** *NR2*

Sequence ID/ Work Center ID	Operation Description	Set Up/ Run Hours	Tool ID	Tool #	Plan Code	Accept Qty	Reject Qty	Reject Number	Insp. Stamp
Draw Nbr	**Revision Nbr**								
646.9500	N/C								
100	Document Control	0.00							
100	DOCUMENT CONTROL								
DC	**Memo**	0.00							
Doc.Control -USB or Paperwork	Photocopy bluefile & type labels per PPP 646.9502								
110	Pick Kit	0.00							
110									
Packaging	**Memo**	0.00							
Packaging									
120	QC4- 100% Inspect kits for completeness	0.00							
120									
QC	**Memo**	0.03							
Quality Control									

DQA: _____ Date: _____

WORK ORDER NON-CONFORMANCE / UPDATE

QA Closed: Date:

Work Order update only ☐

Work Order: _____

Part No. _____

NCR No.

DISPOSITION

Rework	☐
Scrap	☐
Use-as-is	☐
Suspected Unapproved	☐

AGAINST DEPARTMENT/PROCESS

Skid-tube	☐	Cross tube	☐	Water Jet	☐
Machining	☐	Small Fab	☐	Prod. Eng. Coor.	☐
Thermoforming	☐	Finishing	☐	Rec/Store/Packaging	☐
Large Fab	☐	Composite	☐	Supplier	☐
Engineering	☐				
Quality	☐				
Other	☐				

Date :

Step #:

QTY Effective :

MRB (QSI042) Approval

Description Work Order Deviation

Disposition

Completed By

Lead hand / Supervisor Approval Verification

QC / QA Coordinator Approval

Root Cause

Environment	☐	☐	No Re-verfication
Design	☐	☐	Operator
Doc/Data	☐	☐	Offset/Setup
Equip/Tooling	☐	☐	Supplier
Handling/Pre	☐	☐	Training
Material	☐	☐	Use for Testing
Internal Transport	☐	☐	Poor Information
Tribal Knowledge	☐	☐	Rushing
LOA	☐	☐	Product Improvement
Substation	☐	☐	Process Improvement
Past Expiry Date	☐	☐	Manufacturing Process
Misidentified	☐	☐	Past Due

FAULT CATEGORY

☐ Pressure/Forced	☐ Temperature/Cure	☐ Power Loss/Surge	☐ Positioned Wrong
☐ Bending	☐ Set-up	☐ Folio/Program	☐ Outside Dimensions
☐ Centre Not Concentric	☐ BOM/Route	☐ Grain	☐ Over/Under tolerance
☐ Cracks	☐ Broken/Damage/Defect	☐ Weld	☐ Part Incorrect
☐ Crimp/Kink/Ripple/Wave	☐ Inspection Incomplete/Unqualified	☐ Wrong Stock Pulled	☐ Part Lost/Missing
☐ Cuffs	☐ Contamination	☐ Out of Sequence	☐ Part Moved
☐ Crushing	☐ Countersink	☐ Off-set	☐ Drawing
☐ Heat Treat	☐ Cut Too Short	☐ Mislabeled	☐ Finish
☐ Wave/Twist in Tube	☐ Instructions Incomplete/Unclear	☐ Fit/Function	☐ Misread
☐ Marks/Chatter	☐ Drill Holes	☐ Misaligned/off center	☐ Turning Sequence

☐ OTHER :

Item ID: 646.9502 **Accept** *N900040100* **Setup Start** *NS1*
Revision ID: **Stop** *NS2*
Item Name: 206A/B/L-Series Cable Cutter System, Low
Start Date: 9/6/2017 **Start Qty:** 1.00 *1* **Cust Item ID:**
Required Date: 9/13/2017 **Req'd Qty:** 1.00 *1* **Customer:**
Reference:

Approvals: **Process Plan:** _____ **Date:** _____ **Tooling:** _____ **Date:** _____ **Run Start** *NR1*
QC: _____ **Date:** _____ **SPC (Y/N):** _____ **Date:** _____ **Stop** *NR2*

Sequence ID/ Work Center ID	Operation Description	Set Up/ Run Hours	Tool ID	Tool #	Plan Code	Accept Qty	Reject Qty	Reject Number	Insp. Stamp
130	Identify as per dwg & Stock Location:_____	0.00							
130	Packaging								
Packaging	**Memo**	0.00							
Packaging	Identify and pack for shipping as per PPP 646.9502 Location :FG101								
140	QC21- Final Inspection - Work Order Release	0.00							
140									
QC	**Memo**	0.10							
Quality Control									

DQA: _____ Date: _____

WORK ORDER NON-CONFORMANCE / UPDATE

QA Closed: Date:

Work Order update only ☐

Work Order: _____

Part No. _____

NCR No.

DISPOSITION

Rework	☐
Scrap	☐
Use-as-is	☐
Suspected Unapproved	☐

AGAINST DEPARTMENT/PROCESS

Skid-tube	☐	Cross tube	☐	Water Jet	☐	Engineering	☐
Machining	☐	Small Fab	☐	Prod. Eng. Coor.	☐	Quality	☐
Thermoforming	☐	Finishing	☐	Rec/Store/Packaging	☐	Other	☐
Large Fab	☐	Composite	☐	Supplier	☐		☐

Date :	Step #:	QTY Effective :	MRB (QSI042) Approval

Description Work Order Deviation	Disposition	Completed By
		Lead hand / Supervisor Approval Verification
		QC / QA Coordinator Approval

Root Cause

Environment	☐	☐	No Re-verfication
Design	☐	☐	Operator
Doc/Data	☐	☐	Offset/Setup
Equip/Tooling	☐	☐	Supplier
Handling/Pre	☐	☐	Training
Material	☐	☐	Use for Testing
Internal Transport	☐	☐	Poor Information
Tribal Knowledge	☐	☐	Rushing
LOA	☐	☐	Product Improvement
Substation	☐	☐	Process Improvement
Past Expiry Date	☐	☐	Manufacturing Process
Misidentified	☐	☐	Past Due

FAULT CATEGORY

☐	Pressure/Forced	☐	Temperature/Cure	☐	Power Loss/Surge	☐	Positioned Wrong
☐	Bending	☐	Set-up	☐	Folio/Program	☐	Outside Dimensions
☐	Centre Not Concentric	☐	BOM/Route	☐	Grain	☐	Over/Under tolerance
☐	Cracks	☐	Broken/Damage/Defect	☐	Weld	☐	Part Incorrect
☐	Crimp/Kink/Ripple/Wave	☐	Inspection Incomplete/Unqualified	☐	Wrong Stock Pulled	☐	Part Lost/Missing
☐	Cuffs	☐	Contamination	☐	Out of Sequence	☐	Part Moved
☐	Crushing	☐	Countersink	☐	Off-set	☐	Drawing
☐	Heat Treat	☐	Cut Too Short	☐	Mislabeled	☐	Finish
☐	Wave/Twist in Tube	☐	Instructions Incomplete/Unclear	☐	Fit/Function	☐	Misread
☐	Marks/Chatter	☐	Drill Holes	☐	Misaligned/off center	☐	Turning Sequence

☐ OTHER :

Picklist Print

Wednesday, September 06, 2017 3:12:43 PM

Work Order ID: 165975 *165975*

Parent Item: 646.9502 *646 9502*

Parent Item Name: 206A/B/L-Series Cable Cutter System, Low

Start Date: 9/6/2017 **Required Date:** 9/13/2017

Start Qty: 1.00 **Required Qty:** 1.00

Comments: IPP REV:A 12.08.28 NEW ISSUE DD VERF:JLM

Component Item ID/ Item Name	Replacement Item ID	Mfg/ Purch	Bin Item	Primary Location	Last Location	Route Seq ID	Unit of Measure	Qty on Hand	Qty per Kit	Total Qty	Qty Issued	Date Issued	Status
600.0990		Purchased	No			110	Each	18.0000	1	1			
600 0990									**				
Magnabond 6398 Part A Size 112 ml													

Location	Loc Qty	Loc Code	
PKG	18		
M136586	1		
M136862	1		
M137073	1		
M137495	4		
M137712	7		
M138326	4		

Component Item ID/ Item Name	Replacement Item ID	Mfg/ Purch	Bin Item	Primary Location	Last Location	Route Seq ID	Unit of Measure	Qty on Hand	Qty per Kit	Total Qty	Qty Issued	Date Issued	Status
600.0991		Purchased	No			110	Each	19.0000	1	1			
600 0991									**				
Magnabond 6398 Part B Size 112 ml													

Location	Loc Qty	Loc Code	
PKG	19		
m136586	2		
m136862	1		
m137073	1		
m137495	4		
m137712	7		
m138326	4		

Component Item ID/ Item Name	Replacement Item ID	Mfg/ Purch	Bin Item	Primary Location	Last Location	Route Seq ID	Unit of Measure	Qty on Hand	Qty per Kit	Total Qty	Qty Issued	Date Issued	Status
600.1012		Purchased	No			110	Each	9.0000	1	1			
600 1012									**				
Sealant PR1425B2 (#654 sem)													

Location	Loc Qty	Loc Code	
cck017	9		
m138326	9		

DQA: _____ Date: _____

DART AEROSPACE

WORK ORDER NON-CONFORMANCE / UPDATE

QA Closed: Date: Work Order update only ☐

Work Order: _____

Part No. _____

NCR No.

DISPOSITION

Rework	☐
Scrap	☐
Use-as-is	☐
Suspected Unapproved	☐

AGAINST DEPARTMENT/PROCESS

Skid-tube	☐	Cross tube	☐	Water Jet	☐	Engineering	☐
Machining	☐	Small Fab	☐	Prod. Eng. Coor.	☐	Quality	☐
Thermoforming	☐	Finishing	☐	Rec/Store/Packaging	☐	Other	☐
Large Fab	☐	Composite	☐	Supplier	☐		☐

Date :	Step #:	QTY Effective :	MRB (QSI042) Approval

Description Work Order Deviation	Disposition	Completed By
		Lead hand / Supervisor Approval Verification
		QC / QA Coordinator Approval

Root Cause

Environment	☐	☐	No Re-verfication
Design	☐	☐	Operator
Doc/Data	☐	☐	Offset/Setup
Equip/Tooling	☐	☐	Supplier
Handling/Pre	☐	☐	Training
Material	☐	☐	Use for Testing
Internal Transport	☐	☐	Poor Information
Tribal Knowledge	☐	☐	Rushing
LOA	☐	☐	Product Improvement
Substation	☐	☐	Process Improvement
Past Expiry Date	☐	☐	Manufacturing Process
Misidentified	☐	☐	Past Due

FAULT CATEGORY

☐	Pressure/Forced	☐	Temperature/Cure	☐	Power Loss/Surge	☐	Positioned Wrong
☐	Bending	☐	Set-up	☐	Folio/Program	☐	Outside Dimensions
☐	Centre Not Concentric	☐	BOM/Route	☐	Grain	☐	Over/Under tolerance
☐	Cracks	☐	Broken/Damage/Defect	☐	Weld	☐	Part Incorrect
☐	Crimp/Kink/Ripple/Wave	☐	Inspection Incomplete/Unqualified	☐	Wrong Stock Pulled	☐	Part Lost/Missing
☐	Cuffs	☐	Contamination	☐	Out of Sequence	☐	Part Moved
☐	Crushing	☐	Countersink	☐	Off-set	☐	Drawing
☐	Heat Treat	☐	Cut Too Short	☐	Mislabeled	☐	Finish
☐	Wave/Twist in Tube	☐	Instructions Incomplete/Unclear	☐	Fit/Function	☐	Misread
☐	Marks/Chatter	☐	Drill Holes	☐	Misaligned/off center	☐	Turning Sequence

☐ OTHER :

Work Order ID: 165975 *165975*
Parent Item: 646.9502 *646 9502*
Parent Item Name: 206A/B/L-Series Cable Cutter System, Low
Start Date: 9/6/2017 **Required Date:** 9/13/2017
Start Qty: 1.00 **Required Qty:** 1.00

646.9601	Manufactured	No	110	Each	0.0000	1	1	
646 9601						**		
Upper Cutter Assembly								
646.9603	Manufactured	No	110	Each	3.0000	1	1	
646 9603						**		
Lower Cutter Assembly Low								

Location	Loc Qty	Loc Code		
CCK036	3			
160092	3	5/10/2018		

646.9810	Manufactured	No	110	Each	0.0000	1	1	
646 9810						**		
Deflector								
646.9910	Manufactured	No	110	Each	0.0000	4	4	
646 9910						**		
Struts								
647.0110	Manufactured	No	110	Each	0.0000	1	1	
647 0110						**		
Roof Doubler								
647.0111	Manufactured	No	110	Each	3.0000	1	1	
647 0111						**		
Panel								

Location	Loc Qty	Loc Code		
CCK088	3			
159852	3			

647.0112	Manufactured	No	110	Each	0.0000	8	8	
647 0112						**		
Strut Bracket								
647.0113	Manufactured	No	110	Each	0.0000	2	2	
647 0113						**		
Strut Doubler								

DQA: _____ Date: _____

WORK ORDER NON-CONFORMANCE / UPDATE

QA Closed: Date:

Work Order update only ☐

Work Order: _____

Part No. _____

NCR No.

DISPOSITION

Rework	☐
Scrap	☐
Use-as-is	☐
Suspected Unapproved	☐

AGAINST DEPARTMENT/PROCESS

Skid-tube	☐	Cross tube	☐	Water Jet	☐	Engineering	☐
Machining	☐	Small Fab	☐	Prod. Eng. Coor.	☐	Quality	☐
Thermoforming	☐	Finishing	☐	Rec/Store/Packaging	☐	Other	☐
Large Fab	☐	Composite	☐	Supplier	☐		☐

Date :	Step #:	QTY Effective :	MRB (QSI042) Approval

Description Work Order Deviation	Disposition	Completed By
		Lead hand / Supervisor Approval Verification
		QC / QA Coordinator Approval

Root Cause

Environment	☐	☐	No Re-verfication
Design	☐	☐	Operator
Doc/Data	☐	☐	Offset/Setup
Equip/Tooling	☐	☐	Supplier
Handling/Pre	☐	☐	Training
Material	☐	☐	Use for Testing
Internal Transport	☐	☐	Poor Information
Tribal Knowledge	☐	☐	Rushing
LOA	☐	☐	Product Improvement
Substation	☐	☐	Process Improvement
Past Expiry Date	☐	☐	Manufacturing Process
Misidentified	☐	☐	Past Due

FAULT CATEGORY

☐ Pressure/Forced	☐ Temperature/Cure	☐ Power Loss/Surge	☐ Positioned Wrong
☐ Bending	☐ Set-up	☐ Folio/Program	☐ Outside Dimensions
☐ Centre Not Concentric	☐ BOM/Route	☐ Grain	☐ Over/Under tolerance
☐ Cracks	☐ Broken/Damage/Defect	☐ Weld	☐ Part Incorrect
☐ Crimp/Kink/Ripple/Wave	☐ Inspection Incomplete/Unqualified	☐ Wrong Stock Pulled	☐ Part Lost/Missing
☐ Cuffs	☐ Contamination	☐ Out of Sequence	☐ Part Moved
☐ Crushing	☐ Countersink	☐ Off-set	☐ Drawing
☐ Heat Treat	☐ Cut Too Short	☐ Mislabeled	☐ Finish
☐ Wave/Twist in Tube	☐ Instructions Incomplete/Unclear	☐ Fit/Function	☐ Misread
☐ Marks/Chatter	☐ Drill Holes	☐ Misaligned/off center	☐ Turning Sequence

☐ OTHER :

Work Order ID: 165975 *165975*
Parent Item: 646.9502 *646 9502*
Parent Item Name: 206A/B/L-Series Cable Cutter System, Low

Start Date: 9/6/2017 **Required Date:** 9/13/2017
Start Qty: 1.00 **Required Qty:** 1.00

647.0114	Manufactured	No		110	Each	41.0000	1	1	
647 0114							**		
Clip									
			Location		**Loc Qty**	**Loc Code**			
			CCK106		41				
				106616	41				
647.0115	Manufactured	No		110	Each	36.0000	1	1	
647 0115							**		
Clip									
			Location		**Loc Qty**	**Loc Code**			
			CCK106		36				
				106617	36				
647.0116	Manufactured	No		110	Each	24.0000	2	2	
647 0116							**		
Doubler									
			Location		**Loc Qty**	**Loc Code**			
			CCK107		24				
				159857	24				
647.0210	Manufactured	No		110	Each	0.0000	1	1	
647 0210							**		
Rail									
647.0310	Manufactured	No		110	Each	0.0000	2	2	
647 0310							**		
Channel									
647.0410	Manufactured	No		110	Each	2.0000	1	1	
647 0410							**		
Tube									
			Location		**Loc Qty**	**Loc Code**			
			CCK107		2				
				159786	2				

DQA: _____ Date: _____

WORK ORDER NON-CONFORMANCE / UPDATE

QA Closed: Date:

Work Order update only ☐

Work Order: _____

Part No. _____

NCR No.

DISPOSITION

Rework	☐
Scrap	☐
Use-as-is	☐
Suspected Unapproved	☐

AGAINST DEPARTMENT/PROCESS

Skid-tube	☐	Cross tube	☐	Water Jet	☐	Engineering	☐
Machining	☐	Small Fab	☐	Prod. Eng. Coor.	☐	Quality	☐
Thermoforming	☐	Finishing	☐	Rec/Store/Packaging	☐	Other	☐
Large Fab	☐	Composite	☐	Supplier	☐		☐

Date :	Step #:	QTY Effective :	MRB (QSI042) Approval

Description Work Order Deviation	Disposition	Completed By
		Lead hand / Supervisor Approval Verification
		QC / QA Coordinator Approval

Root Cause

Environment	☐	☐	No Re-verfication
Design	☐	☐	Operator
Doc/Data	☐	☐	Offset/Setup
Equip/Tooling	☐	☐	Supplier
Handling/Pre	☐	☐	Training
Material	☐	☐	Use for Testing
Internal Transport	☐	☐	Poor Information
Tribal Knowledge	☐	☐	Rushing
LOA	☐	☐	Product Improvement
Substation	☐	☐	Process Improvement
Past Expiry Date	☐	☐	Manufacturing Process
Misidentified	☐	☐	Past Due

FAULT CATEGORY

☐ Pressure/Forced	☐ Temperature/Cure	☐ Power Loss/Surge	☐ Positioned Wrong
☐ Bending	☐ Set-up	☐ Folio/Program	☐ Outside Dimensions
☐ Centre Not Concentric	☐ BOM/Route	☐ Grain	☐ Over/Under tolerance
☐ Cracks	☐ Broken/Damage/Defect	☐ Weld	☐ Part Incorrect
☐ Crimp/Kink/Ripple/Wave	☐ Inspection Incomplete/Unqualified	☐ Wrong Stock Pulled	☐ Part Lost/Missing
☐ Cuffs	☐ Contamination	☐ Out of Sequence	☐ Part Moved
☐ Crushing	☐ Countersink	☐ Off-set	☐ Drawing
☐ Heat Treat	☐ Cut Too Short	☐ Mislabeled	☐ Finish
☐ Wave/Twist in Tube	☐ Instructions Incomplete/Unclear	☐ Fit/Function	☐ Misread
☐ Marks/Chatter	☐ Drill Holes	☐ Misaligned/off center	☐ Turning Sequence

☐ OTHER :

Work Order ID: 165975 *165975*
Parent Item: 646.9502 *646 9502*
Parent Item Name: 206A/B/L-Series Cable Cutter System, Low
Start Date: 9/6/2017 **Required Date:** 9/13/2017
Start Qty: 1.00 **Required Qty:** 1.00

647.1210	Manufactured	No		110	Each	22.0000	1	1

647 1210 **
Screen

Location	Loc Qty	Loc Code	
CCK107	22		
159856	21		
165091	1		

AN3-10A	Purchased	No		110	Each	192.0000	8	8

AN3-10A **
Bolt

Location	Loc Qty	Loc Code	
GA	38		
m136787	38		
ST349	154		
m138326	154		

AN3-11A	Purchased	No		110	Each	63.0000	8	8

AN3-11A **
Bolt

Location	Loc Qty	Loc Code	
ST349	63		
m136192	63		

AN3-3A	Purchased	No		110	Each	108.0000	1	1

AN3-3A **
Bolt

Location	Loc Qty	Loc Code	
ST350	108		
m137853	33		
m138207	25		
m138409	50		

DQA: _____ Date: _____

WORK ORDER NON-CONFORMANCE / UPDATE

DART AEROSPACE

QA Closed: Date: Work Order update only ☐

Work Order: _____

Part No. _____

NCR No.

DISPOSITION

Rework	☐
Scrap	☐
Use-as-is	☐
Suspected Unapproved	☐

AGAINST DEPARTMENT/PROCESS

Skid-tube	☐	Cross tube	☐	Water Jet	☐
Machining	☐	Small Fab	☐	Prod. Eng. Coor.	☐
Thermoforming	☐	Finishing	☐	Rec/Store/Packaging	☐
Large Fab	☐	Composite	☐	Supplier	☐

Engineering	☐		
Quality	☐		
Other	☐		

Date :	Step #:	QTY Effective :	MRB (QSI042) Approval

Description Work Order Deviation	Disposition	Completed By
		Lead hand / Supervisor Approval Verification
		QC / QA Coordinator Approval

Root Cause

Environment	☐	☐	No Re-verfication
Design	☐	☐	Operator
Doc/Data	☐	☐	Offset/Setup
Equip/Tooling	☐	☐	Supplier
Handling/Pre	☐	☐	Training
Material	☐	☐	Use for Testing
Internal Transport	☐	☐	Poor Information
Tribal Knowledge	☐	☐	Rushing
LOA	☐	☐	Product Improvement
Substation	☐	☐	Process Improvement
Past Expiry Date	☐	☐	Manufacturing Process
Misidentified	☐	☐	Past Due

FAULT CATEGORY

☐ Pressure/Forced	☐ Temperature/Cure	☐ Power Loss/Surge	☐ Positioned Wrong
☐ Bending	☐ Set-up	☐ Folio/Program	☐ Outside Dimensions
☐ Centre Not Concentric	☐ BOM/Route	☐ Grain	☐ Over/Under tolerance
☐ Cracks	☐ Broken/Damage/Defect	☐ Weld	☐ Part Incorrect
☐ Crimp/Kink/Ripple/Wave	☐ Inspection Incomplete/Unqualified	☐ Wrong Stock Pulled	☐ Part Lost/Missing
☐ Cuffs	☐ Contamination	☐ Out of Sequence	☐ Part Moved
☐ Crushing	☐ Countersink	☐ Off-set	☐ Drawing
☐ Heat Treat	☐ Cut Too Short	☐ Mislabeled	☐ Finish
☐ Wave/Twist in Tube	☐ Instructions Incomplete/Unclear	☐ Fit/Function	☐ Misread
☐ Marks/Chatter	☐ Drill Holes	☐ Misaligned/off center	☐ Turning Sequence

☐ OTHER :

Work Order ID: 165975 *165975*
Parent Item: 646.9502 *646 9502*
Parent Item Name: 206A/B/L-Series Cable Cutter System, Low
Start Date: 9/6/2017 **Required Date:** 9/13/2017
Start Qty: 1.00 **Required Qty:** 1.00

AN743-13		Purchased	No		110	Each	24.0000	1	1
AN743-13								**	
Bracket									
			Location		**Loc Qty**	**Loc Code**			
			ST330		24				
				M136665	4				
				M138326	20				
CCR264SS3-04		Purchased	No		110	Each	234.0000	12	12
CCR264SS3-04								**	
Rivet									
			Location		**Loc Qty**	**Loc Code**			
			ST321		234				
				m137391	34				
				m138333	200				
CCR264SS-3-06		Purchased	No		110	Each	284.0000	8	8
CCR264SS-3-06								**	
Rivet									
			Location		**Loc Qty**	**Loc Code**			
			ST321		284				
				m138333	284				
CCR264SS3-2	CCR264SS3-02	Purchased	No		110	Each	200.0000	4	4
CCR264SS3-2								**	
Rivet, Cherry									
			Location		**Loc Qty**	**Loc Code**			
			CCK003		200				
				m138333	200				

DQA: _____ Date: _____

WORK ORDER NON-CONFORMANCE / UPDATE

QA Closed: Date:

Work Order update only ☐

Work Order: _____

Part No. _____

NCR No.

DISPOSITION

Rework	☐
Scrap	☐
Use-as-is	☐
Suspected Unapproved	☐

AGAINST DEPARTMENT/PROCESS

Skid-tube	☐	Cross tube	☐	Water Jet	☐
Machining	☐	Small Fab	☐	Prod. Eng. Coor.	☐
Thermoforming	☐	Finishing	☐	Rec/Store/Packaging	☐
Large Fab	☐	Composite	☐	Supplier	☐

Engineering	☐		
Quality	☐		
Other	☐		

Date :	Step #:	QTY Effective :	MRB (QSI042) Approval

Description Work Order Deviation	Disposition	Completed By
		Lead hand / Supervisor Approval Verification
		QC / QA Coordinator Approval

Root Cause

Environment	☐	☐	No Re-verfication
Design	☐	☐	Operator
Doc/Data	☐	☐	Offset/Setup
Equip/Tooling	☐	☐	Supplier
Handling/Pre	☐	☐	Training
Material	☐	☐	Use for Testing
Internal Transport	☐	☐	Poor Information
Tribal Knowledge	☐	☐	Rushing
LOA	☐	☐	Product Improvement
Substation	☐	☐	Process Improvement
Past Expiry Date	☐	☐	Manufacturing Process
Misidentified	☐	☐	Past Due

FAULT CATEGORY

☐ Pressure/Forced	☐ Temperature/Cure	☐ Power Loss/Surge	☐ Positioned Wrong
☐ Bending	☐ Set-up	☐ Folio/Program	☐ Outside Dimensions
☐ Centre Not Concentric	☐ BOM/Route	☐ Grain	☐ Over/Under tolerance
☐ Cracks	☐ Broken/Damage/Defect	☐ Weld	☐ Part Incorrect
☐ Crimp/Kink/Ripple/Wave	☐ Inspection Incomplete/Unqualified	☐ Wrong Stock Pulled	☐ Part Lost/Missing
☐ Cuffs	☐ Contamination	☐ Out of Sequence	☐ Part Moved
☐ Crushing	☐ Countersink	☐ Off-set	☐ Drawing
☐ Heat Treat	☐ Cut Too Short	☐ Mislabeled	☐ Finish
☐ Wave/Twist in Tube	☐ Instructions Incomplete/Unclear	☐ Fit/Function	☐ Misread
☐ Marks/Chatter	☐ Drill Holes	☐ Misaligned/off center	☐ Turning Sequence

☐ OTHER :

Work Order ID: 165975 *165975*
Parent Item: 646.9502 *646 9502*
Parent Item Name: 206A/B/L-Series Cable Cutter System, Low

Start Date: 9/6/2017 **Required Date:** 9/13/2017
Start Qty: 1.00 **Required Qty:** 1.00

CR3212-4-4	CR3212-4-04	Purchased	No		110	Each	100.0000	1	1
CR3212-4-4								**	
CHERRY RIVET									
			Location		**Loc Qty**	**Loc Code**			
			CCK003		100				
				m138333	100				
CR3212-5-4		Purchased	No		110	Each	168.0000	8	8
CR3212-5-4								**	
Cherry Rivet									
			Location		**Loc Qty**	**Loc Code**			
			ST320		168				
				m138336	168				
CR3213-4-05		Purchased	No		110	Each	206.0000	26	26
CR3213-4-05								**	
RIVET									
			Location		**Loc Qty**	**Loc Code**			
			ST319		206				
				m138326	206				
CR3213-4-1		Purchased	No		110	Each	270.0000	14	14
CR3213-4-1								**	
Cherry Rivet									
			Location		**Loc Qty**	**Loc Code**			
			ST320		270				
				m138336	270				
CR3213-4-2		Purchased	No		110	Each	266.0000	18	18
CR3213-4-2								**	
Cherry Rivet									
			Location		**Loc Qty**	**Loc Code**			
			ST320		266				
				m138336	266				

DQA: _____ Date: _____

WORK ORDER NON-CONFORMANCE / UPDATE

QA Closed: Date:

Work Order update only ☐

Work Order: _____

Part No. _____

NCR No.

DISPOSITION

Rework	☐
Scrap	☐
Use-as-is	☐
Suspected Unapproved	☐

AGAINST DEPARTMENT/PROCESS

Skid-tube	☐	Cross tube	☐	Water Jet	☐
Machining	☐	Small Fab	☐	Prod. Eng. Coor.	☐
Thermoforming	☐	Finishing	☐	Rec/Store/Packaging	☐
Large Fab	☐	Composite	☐	Supplier	☐

Engineering	☐		
Quality	☐		
Other	☐		

Date :

Step #:

QTY Effective :

MRB (QSI042) Approval

Description Work Order Deviation

Disposition

Completed By

Lead hand / Supervisor Approval Verification

QC / QA Coordinator Approval

Root Cause

Environment	☐	☐	No Re-verfication
Design	☐	☐	Operator
Doc/Data	☐	☐	Offset/Setup
Equip/Tooling	☐	☐	Supplier
Handling/Pre	☐	☐	Training
Material	☐	☐	Use for Testing
Internal Transport	☐	☐	Poor Information
Tribal Knowledge	☐	☐	Rushing
LOA	☐	☐	Product Improvement
Substation	☐	☐	Process Improvement
Past Expiry Date	☐	☐	Manufacturing Process
Misidentified	☐	☐	Past Due

FAULT CATEGORY

☐ Pressure/Forced	☐ Temperature/Cure	☐ Power Loss/Surge	☐ Positioned Wrong
☐ Bending	☐ Set-up	☐ Folio/Program	☐ Outside Dimensions
☐ Centre Not Concentric	☐ BOM/Route	☐ Grain	☐ Over/Under tolerance
☐ Cracks	☐ Broken/Damage/Defect	☐ Weld	☐ Part Incorrect
☐ Crimp/Kink/Ripple/Wave	☐ Inspection Incomplete/Unqualified	☐ Wrong Stock Pulled	☐ Part Lost/Missing
☐ Cuffs	☐ Contamination	☐ Out of Sequence	☐ Part Moved
☐ Crushing	☐ Countersink	☐ Off-set	☐ Drawing
☐ Heat Treat	☐ Cut Too Short	☐ Mislabeled	☐ Finish
☐ Wave/Twist in Tube	☐ Instructions Incomplete/Unclear	☐ Fit/Function	☐ Misread
☐ Marks/Chatter	☐ Drill Holes	☐ Misaligned/off center	☐ Turning Sequence

☐ OTHER :

Picklist Print

Wednesday, September 06, 2017 3:12:43 PM

Work Order ID: 165975 *165975*

Parent Item: 646.9502 *646 9502*

Parent Item Name: 206A/B/L-Series Cable Cutter System, Low

Start Date: 9/6/2017 **Required Date:** 9/13/2017

Start Qty: 1.00 **Required Qty:** 1.00

CR3213-4-3		Purchased	No		110	Each	378.0000	18	18
CR3213-4-3								**	
Rivet, Cherry									

Location	Loc Qty	Loc Code
GA	92	
m136042	92	
ST319	286	
m138326	286	

CR3213-4-4		Purchased	No		110	Each	390.0000	19	19
CR3213-4-4								**	
Rivet, Cherry									

Location	Loc Qty	Loc Code
CCK003	390	
m138333	390	

CR3213-4-6		Purchased	No		110	Each	353.0000	20	20
CR3213-4-6								**	
Rivet									

Location	Loc Qty	Loc Code
ST319	353	
M138333	353	

MS21042-08	MS21042L08	Purchased	No		110	Each	0.0000	54	54
MS21042-08								**	
USE MS21042L08									
MS21042-3	MS21042L3	Purchased	No		110	Each	0.0000	17	17
MS21042-3								**	
Nut									

DQA: _____ Date: _____

DART AEROSPACE

WORK ORDER NON-CONFORMANCE / UPDATE

QA Closed: Date: Work Order update only ☐

Work Order: _____

Part No. _____

NCR No.

DISPOSITION

Rework ☐
Scrap ☐
Use-as-is ☐
Suspected Unapproved ☐

AGAINST DEPARTMENT/PROCESS

Skid-tube ☐	Cross tube ☐	Water Jet ☐	Engineering ☐
Machining ☐	Small Fab ☐	Prod. Eng. Coor. ☐	Quality ☐
Thermoforming ☐	Finishing ☐	Rec/Store/Packaging ☐	Other ☐
Large Fab ☐	Composite ☐	Supplier ☐	

Date :	Step #:	QTY Effective :	MRB (QSI042) Approval

Description Work Order Deviation	Disposition	Completed By
		Lead hand / Supervisor Approval Verification
		QC / QA Coordinator Approval

Root Cause

Environment ☐	☐	☐	No Re-verfication
Design ☐	☐	☐	Operator
Doc/Data ☐	☐	☐	Offset/Setup
Equip/Tooling ☐	☐	☐	Supplier
Handling/Pre ☐	☐	☐	Training
Material ☐	☐	☐	Use for Testing
Internal Transport ☐	☐	☐	Poor Information
Tribal Knowledge ☐	☐	☐	Rushing
LOA ☐	☐	☐	Product Improvement
Substation ☐	☐	☐	Process Improvement
Past Expiry Date ☐	☐	☐	Manufacturing Process
Misidentified ☐	☐	☐	Past Due

FAULT CATEGORY

☐ Pressure/Forced	☐ Temperature/Cure	☐ Power Loss/Surge	☐ Positioned Wrong
☐ Bending	☐ Set-up	☐ Folio/Program	☐ Outside Dimensions
☐ Centre Not Concentric	☐ BOM/Route	☐ Grain	☐ Over/Under tolerance
☐ Cracks	☐ Broken/Damage/Defect	☐ Weld	☐ Part Incorrect
☐ Crimp/Kink/Ripple/Wave	☐ Inspection Incomplete/Unqualified	☐ Wrong Stock Pulled	☐ Part Lost/Missing
☐ Cuffs	☐ Contamination	☐ Out of Sequence	☐ Part Moved
☐ Crushing	☐ Countersink	☐ Off-set	☐ Drawing
☐ Heat Treat	☐ Cut Too Short	☐ Mislabeled	☐ Finish
☐ Wave/Twist in Tube	☐ Instructions Incomplete/Unclear	☐ Fit/Function	☐ Misread
☐ Marks/Chatter	☐ Drill Holes	☐ Misaligned/off center	☐ Turning Sequence

☐ OTHER :

Work Order ID: 165975 *165975*
Parent Item: 646.9502 *646 9502*
Parent Item Name: 206A/B/L-Series Cable Cutter System, Low
Start Date: 9/6/2017 **Required Date:** 9/13/2017
Start Qty: 1.00 **Required Qty:** 1.00

MS21047-3	Purchased	No		110	Each	81.0000	6	6
MS21047-3							**	
Nut Plate								

Location	Loc Qty	Loc Code	
ST301	81		
m138040	81		

MS21059-3	Purchased	No		110	Each	395.0000	2	2
MS21059-3							**	
Nut Plate								

Location	Loc Qty	Loc Code	
ST301	395		
123023	12		
123900	383		

MS21059L08	Purchased	No		110	Each	162.0000	4	4
MS21059L08							**	
Nut								

Location	Loc Qty	Loc Code	
ST300	162		
m136554	62		
m138326	100		

MS24694-S8	Purchased	No		110	Each	169.0000	5	5
MS24694-S8							**	
Screw								

Location	Loc Qty	Loc Code	
ST285	169		
M134654	19		
M138333	150		

DQA: _____ Date: _____

WORK ORDER NON-CONFORMANCE / UPDATE

QA Closed: Date:

Work Order update only ☐

Work Order: _____

Part No. _____

NCR No.

DISPOSITION

Rework	☐
Scrap	☐
Use-as-is	☐
Suspected Unapproved	☐

AGAINST DEPARTMENT/PROCESS

Skid-tube	☐	Cross tube	☐	Water Jet	☐	Engineering	☐
Machining	☐	Small Fab	☐	Prod. Eng. Coor.	☐	Quality	☐
Thermoforming	☐	Finishing	☐	Rec/Store/Packaging	☐	Other	☐
Large Fab	☐	Composite	☐	Supplier	☐		☐

Date :

Step #:

QTY Effective :

MRB (QSI042) Approval

Description Work Order Deviation

Disposition

Completed By

Lead hand / Supervisor Approval Verification

QC / QA Coordinator Approval

Root Cause

Environment	☐	☐	No Re-verfication
Design	☐	☐	Operator
Doc/Data	☐	☐	Offset/Setup
Equip/Tooling	☐	☐	Supplier
Handling/Pre	☐	☐	Training
Material	☐	☐	Use for Testing
Internal Transport	☐	☐	Poor Information
Tribal Knowledge	☐	☐	Rushing
LOA	☐	☐	Product Improvement
Substation	☐	☐	Process Improvement
Past Expiry Date	☐	☐	Manufacturing Process
Misidentified	☐	☐	Past Due

FAULT CATEGORY

☐ Pressure/Forced	☐ Temperature/Cure	☐ Power Loss/Surge	☐ Positioned Wrong
☐ Bending	☐ Set-up	☐ Folio/Program	☐ Outside Dimensions
☐ Centre Not Concentric	☐ BOM/Route	☐ Grain	☐ Over/Under tolerance
☐ Cracks	☐ Broken/Damage/Defect	☐ Weld	☐ Part Incorrect
☐ Crimp/Kink/Ripple/Wave	☐ Inspection Incomplete/Unqualified	☐ Wrong Stock Pulled	☐ Part Lost/Missing
☐ Cuffs	☐ Contamination	☐ Out of Sequence	☐ Part Moved
☐ Crushing	☐ Countersink	☐ Off-set	☐ Drawing
☐ Heat Treat	☐ Cut Too Short	☐ Mislabeled	☐ Finish
☐ Wave/Twist in Tube	☐ Instructions Incomplete/Unclear	☐ Fit/Function	☐ Misread
☐ Marks/Chatter	☐ Drill Holes	☐ Misaligned/off center	☐ Turning Sequence

☐ OTHER :

Work Order ID: 165975 *165975*
Parent Item: 646.9502 *646 9502*
Parent Item Name: 206A/B/L-Series Cable Cutter System, Low
Start Date: 9/6/2017 **Required Date:** 9/13/2017
Start Qty: 1.00 **Required Qty:** 1.00

MS27039-08-06	Purchased	No		110	Each	214.0000	4	4
MS27039-08-06							**	
Screw								

Location	Loc Qty	Loc Code
ST278	214	
m126249	14	
m138326	200	

MS27039-08-09	Purchased	No		110	Each	137.0000	4	4
MS27039-08-09							**	
Screw								

Location	Loc Qty	Loc Code
ST278	137	
m135536	12	
m138333	125	

MS27039-08-11	Purchased	No		110	Each	1,488.000	43	43
MS27039-08-11							**	
SCREW								

Location	Loc Qty	Loc Code
over006	1000	
m138336	1000	
ST278	488	
m138336	488	

MS27039-08-12	Purchased	No		110	Each	88.0000	2	2
MS27039-08-12							**	
Screw								

Location	Loc Qty	Loc Code
ST278	88	
124326	88	

DQA: _____ Date: _____

WORK ORDER NON-CONFORMANCE / UPDATE

QA Closed: Date: Work Order update only ☐

Work Order: _____

Part No. _____

NCR No.

DISPOSITION

Rework	☐
Scrap	☐
Use-as-is	☐
Suspected Unapproved	☐

AGAINST DEPARTMENT/PROCESS

Skid-tube	☐	Cross tube	☐	Water Jet	☐
Machining	☐	Small Fab	☐	Prod. Eng. Coor.	☐
Thermoforming	☐	Finishing	☐	Rec/Store/Packaging	☐
Large Fab	☐	Composite	☐	Supplier	☐
Engineering	☐				
Quality	☐				
Other	☐				

Date :

Step #:

QTY Effective :

MRB (QSI042) Approval

Description Work Order Deviation

Disposition

Completed By

Lead hand / Supervisor Approval Verification

QC / QA Coordinator Approval

Root Cause

Environment	☐	☐	No Re-verfication
Design	☐	☐	Operator
Doc/Data	☐	☐	Offset/Setup
Equip/Tooling	☐	☐	Supplier
Handling/Pre	☐	☐	Training
Material	☐	☐	Use for Testing
Internal Transport	☐	☐	Poor Information
Tribal Knowledge	☐	☐	Rushing
LOA	☐	☐	Product Improvement
Substation	☐	☐	Process Improvement
Past Expiry Date	☐	☐	Manufacturing Process
Misidentified	☐	☐	Past Due

FAULT CATEGORY

☐ Pressure/Forced	☐ Temperature/Cure	☐ Power Loss/Surge	☐ Positioned Wrong
☐ Bending	☐ Set-up	☐ Folio/Program	☐ Outside Dimensions
☐ Centre Not Concentric	☐ BOM/Route	☐ Grain	☐ Over/Under tolerance
☐ Cracks	☐ Broken/Damage/Defect	☐ Weld	☐ Part Incorrect
☐ Crimp/Kink/Ripple/Wave	☐ Inspection Incomplete/Unqualified	☐ Wrong Stock Pulled	☐ Part Lost/Missing
☐ Cuffs	☐ Contamination	☐ Out of Sequence	☐ Part Moved
☐ Crushing	☐ Countersink	☐ Off-set	☐ Drawing
☐ Heat Treat	☐ Cut Too Short	☐ Mislabeled	☐ Finish
☐ Wave/Twist in Tube	☐ Instructions Incomplete/Unclear	☐ Fit/Function	☐ Misread
☐ Marks/Chatter	☐ Drill Holes	☐ Misaligned/off center	☐ Turning Sequence

☐ OTHER :

Work Order ID: 165975 *165975*
Parent Item: 646.9502 *646 9502*
Parent Item Name: 206A/B/L-Series Cable Cutter System, Low
Start Date: 9/6/2017 **Required Date:** 9/13/2017
Start Qty: 1.00 **Required Qty:** 1.00

MS27039-08-13	Purchased	No		110	Each	160.0000	6	6
MS27039-08-13							**	
Screw								

Location	Loc Qty	Loc Code	
ST278	160		
153849	160		

MS27039-1-08	Purchased	No		110	Each	281.0000	5	5
MS27039-1-08							**	
Screw								

Location	Loc Qty	Loc Code	
FP001	234		
m137361	26		
m138209	208		
GA	22		
m128636	22		
ST281	25		
m137820	25		

MS27039-1-11	Purchased	No		110	Each	226.0000	5	5
MS27039-1-11							**	
Screw								

Location	Loc Qty	Loc Code	
ST280	226		
m137544	26		
m138326	200		

MS35842-11	Purchased	No		110	Each	36.0000	1	1
MS35842-11							**	
Hose Clamp								

Location	Loc Qty	Loc Code	
ST545	36		
m134943	6		
m138326	30		

DQA: _____ Date: _____

WORK ORDER NON-CONFORMANCE / UPDATE

QA Closed: Date: Work Order update only ☐

Work Order: _____

Part No. _____

NCR No.

DISPOSITION

Rework	☐
Scrap	☐
Use-as-is	☐
Suspected Unapproved	☐

AGAINST DEPARTMENT/PROCESS

Skid-tube	☐	Cross tube	☐	Water Jet	☐
Machining	☐	Small Fab	☐	Prod. Eng. Coor.	☐
Thermoforming	☐	Finishing	☐	Rec/Store/Packaging	☐
Large Fab	☐	Composite	☐	Supplier	☐
Engineering	☐				
Quality	☐				
Other	☐				

Date :	Step #:	QTY Effective :	MRB (QSI042) Approval

Description Work Order Deviation	Disposition	Completed By
		Lead hand / Supervisor Approval Verification
		QC / QA Coordinator Approval

Root Cause

Environment	☐	☐	No Re-verfication
Design	☐	☐	Operator
Doc/Data	☐	☐	Offset/Setup
Equip/Tooling	☐	☐	Supplier
Handling/Pre	☐	☐	Training
Material	☐	☐	Use for Testing
Internal Transport	☐	☐	Poor Information
Tribal Knowledge	☐	☐	Rushing
LOA	☐	☐	Product Improvement
Substation	☐	☐	Process Improvement
Past Expiry Date	☐	☐	Manufacturing Process
Misidentified	☐	☐	Past Due

FAULT CATEGORY

☐ Pressure/Forced	☐ Temperature/Cure	☐ Power Loss/Surge	☐ Positioned Wrong
☐ Bending	☐ Set-up	☐ Folio/Program	☐ Outside Dimensions
☐ Centre Not Concentric	☐ BOM/Route	☐ Grain	☐ Over/Under tolerance
☐ Cracks	☐ Broken/Damage/Defect	☐ Weld	☐ Part Incorrect
☐ Crimp/Kink/Ripple/Wave	☐ Inspection Incomplete/Unqualified	☐ Wrong Stock Pulled	☐ Part Lost/Missing
☐ Cuffs	☐ Contamination	☐ Out of Sequence	☐ Part Moved
☐ Crushing	☐ Countersink	☐ Off-set	☐ Drawing
☐ Heat Treat	☐ Cut Too Short	☐ Mislabeled	☐ Finish
☐ Wave/Twist in Tube	☐ Instructions Incomplete/Unclear	☐ Fit/Function	☐ Misread
☐ Marks/Chatter	☐ Drill Holes	☐ Misaligned/off center	☐ Turning Sequence

☐ OTHER :

Work Order ID: 165975 *165975*
Parent Item: 646.9502 *646 9502*
Parent Item Name: 206A/B/L-Series Cable Cutter System, Low

Start Date: 9/6/2017 **Required Date:** 9/13/2017
Start Qty: 1.00 **Required Qty:** 1.00

NAS1149F0332P	Purchased	No		110	Each	1,449.000	62	62

NAS1149F0332P **

Washer

Location	Loc Qty	Loc Code	
GA	125		
m133709	125		
ST262	1324		
m138209	1324		

NAS1149FN832P	Purchased	No		110	Each	4,840.000	111	111

NAS1149FN832P **

Washer

Location	Loc Qty	Loc Code	
GA	2967		
M137820	467		
M138336	2500		
ST263	1873		
M138336	1873		

NAS1835-08	Purchased	No		110	Each	140.0000	4	4

NAS1835-08 **

Insert

Location	Loc Qty	Loc Code	
st549	140		
m138336	140		

DQA: _____ Date: _____

WORK ORDER NON-CONFORMANCE / UPDATE

QA Closed: Date:

Work Order update only ☐

Work Order: _____

Part No. _____

NCR No.

DISPOSITION

Rework	☐
Scrap	☐
Use-as-is	☐
Suspected Unapproved	☐

AGAINST DEPARTMENT/PROCESS

Skid-tube	☐	Cross tube	☐	Water Jet	☐
Machining	☐	Small Fab	☐	Prod. Eng. Coor.	☐
Thermoforming	☐	Finishing	☐	Rec/Store/Packaging	☐
Large Fab	☐	Composite	☐	Supplier	☐
Engineering	☐				
Quality	☐				
Other	☐				

Date :

Step #:

QTY Effective :

MRB (QSI042) Approval

Description Work Order Deviation

Disposition

Completed By

Lead hand / Supervisor Approval Verification

QC / QA Coordinator Approval

Root Cause

Environment	☐	☐	No Re-verfication
Design	☐	☐	Operator
Doc/Data	☐	☐	Offset/Setup
Equip/Tooling	☐	☐	Supplier
Handling/Pre	☐	☐	Training
Material	☐	☐	Use for Testing
Internal Transport	☐	☐	Poor Information
Tribal Knowledge	☐	☐	Rushing
LOA	☐	☐	Product Improvement
Substation	☐	☐	Process Improvement
Past Expiry Date	☐	☐	Manufacturing Process
Misidentified	☐	☐	Past Due

FAULT CATEGORY

☐ Pressure/Forced	☐ Temperature/Cure	☐ Power Loss/Surge	☐ Positioned Wrong
☐ Bending	☐ Set-up	☐ Folio/Program	☐ Outside Dimensions
☐ Centre Not Concentric	☐ BOM/Route	☐ Grain	☐ Over/Under tolerance
☐ Cracks	☐ Broken/Damage/Defect	☐ Weld	☐ Part Incorrect
☐ Crimp/Kink/Ripple/Wave	☐ Inspection Incomplete/Unqualified	☐ Wrong Stock Pulled	☐ Part Lost/Missing
☐ Cuffs	☐ Contamination	☐ Out of Sequence	☐ Part Moved
☐ Crushing	☐ Countersink	☐ Off-set	☐ Drawing
☐ Heat Treat	☐ Cut Too Short	☐ Mislabeled	☐ Finish
☐ Wave/Twist in Tube	☐ Instructions Incomplete/Unclear	☐ Fit/Function	☐ Misread
☐ Marks/Chatter	☐ Drill Holes	☐ Misaligned/off center	☐ Turning Sequence

☐ OTHER :

APICAL INDUSTRIES, INC.

ENGINEERING CHANGE NOTICE NO. 03047				SHEET 1 OF 1
DWG NO. 646.9500	REV: NC	PREPARED BY J. JACKSON	DATE: 01/24/11	EFFECT ON DWG ☐ INC. ☒ UNINC.
DWG TITLE: 206 CABLE CUTTERS KIT				
APPROVED BY: ENGR	MFG David Barker	QC Manuel Segura	EFF: NEXT ORDER	

TRANSACTION CODES (TC): A-ADD C-CREATE R-REVISE D-DELETE

REASON: ADDED GPS MOUNT KIT, F/N 52. REVISED DRAWING VIEWS. ADDED NOTE 2.

SHEET 1, ZONE B1 IS:

2 AT CUSTOMERS OPTION, INSTALL F/N 52 BY MATCH DRILLING ONTO F/N 1.

SHEET 2, ZONE A3 IS:

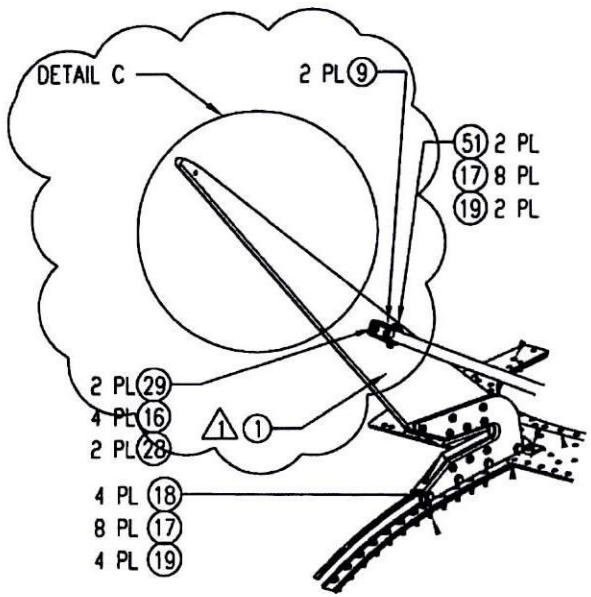

SHEET 2, ZONE B2 IS:

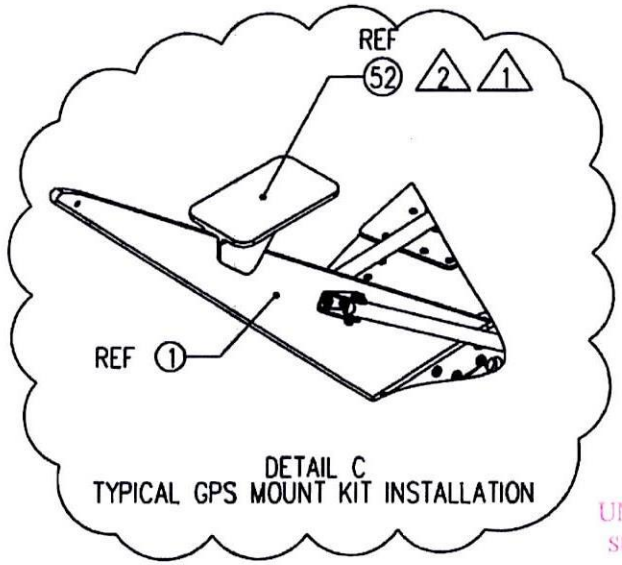

DETAIL C
TYPICAL GPS MOUNT KIT INSTALLATION

SHOP COPY
RETURN TO ENGINEERING
UNCONTROLLED COPY
SUBJECT TO AMENDMENT WITHOUT NOTICE
WORK ORDER NO. 165975
8/14/17

F/N	TC	PART NUMBER	REF QTY .9502	REF QTY .9501	DESCRIPTION	MATERIAL	SPECIFICATION
52	A	647.5701	REF	REF	GPS MOUNT KIT	2	

DOCUMENTS EFFECTED: ☐ MDL ☐ INSTALL INSTRUC ☐ ICA ☒ BOM

CHANGE CATEGORY ☐ MAJOR ☒ MINOR

DER REVIEW REQUIRED ☐ YES ☒ NO

APICAL INDUSTRIES, INC.

ENGINEERING CHANGE NOTICE NO. 02736 | SHEET 1 OF 1

DWG NO. 646.9500 | REV: N/C | PREPARED BY S. HUFF | DATE: 01/06/10 | EFFECT ON DWG ☐ INC. ☒ UNINC.

DWG TITLE: 206 CABLE CUTTERS KIT

APPROVED BY: ENGR [signature] MFG [signature] QC [signature] EFF: CURRENT ORDER

TRANSACTION CODES (TC): A-ADD C-CREATE R-REVISE D-DELETE

REASON: CORRECTED PARTS LIST ERRORS

SHOP COPY
RETURN TO
ENGINEERING
UNCONTROLLED COPY
SUBJECT TO AMENDMENT
WITHOUT NOTICE
WORK ORDER
NO. ~~165971~~ 165975
LM 8/14/17

F/N	TC	PART NUMBER	QTY		DESCRIPTION	MATERIAL/SPECIFICATION
17	R	601.1607	62	62	WASHER	NAS1149F0332P
16	R	601.2764	111	111	WASHER	NAS1149FN832P
			9502	9501		

DOCUMENTS EFFECTED: ☐ MDL ☒ INSTALL INSTRUC ☒ ICA ☐ FMS ☒ BOM

CHANGE CATEGORY ☐ MAJOR ☒ MINOR

DER REVIEW REQUIRED ☐ YES ☒ NO

APICAL INDUSTRIES, INC.

ENGINEERING CHANGE NOTICE NO. 02729 | SHEET 1 OF 3

DWG NO. 646.9500 | REV: N/C | PREPARED BY S. HUFF | DATE: 12/23/09 | EFFECT ON DWG ☐ INC. ☒ UNINC.

DWG TITLE: 206 CABLE CUTTERS KIT

APPROVED BY: ENGR [signature] MFG [signature] QC [signature] EFF: CURRENT ORDER

TRANSACTION CODES (TC): A-ADD C-CREATE R-REVISE D-DELETE

REASON: HARDWARE REVISIONS FROM FIRST INSTALL

SHOP COPY
RETURN TO ENGINEERING
UNCONTROLLED COPY
SUBJECT TO AMENDMENT WITHOUT NOTICE
WORK ORDER NO. 16597
8/14/17

F/N	TC	PART NUMBER	QTY		DESCRIPTION	MATERIAL/SPECIFICATION
51	A	601.3155	8	8	BOLT	AN3-10A
50	A	601.3153	5	5	SCREW	MS24694S8
41	R	601.2893	43	43	SCREW	MS27039-0811
28	R	601.2973	54	54	LOCKNUT	MS21042-08
18	R	601.2826	8	8	BOLT	AN3-11A
16	R	601.2764	127	127	WASHER	NAS1149FN832P
			9502	9501		

DOCUMENTS EFFECTED: ☐ MDL ☒ INSTALL INSTRUC ☒ ICA ☐ FMS ☒ BOM

CHANGE CATEGORY ☐ MAJOR ☒ MINOR

DER REVIEW REQUIRED ☐ YES ☒ NO

SHEET 2, VIEW IS:

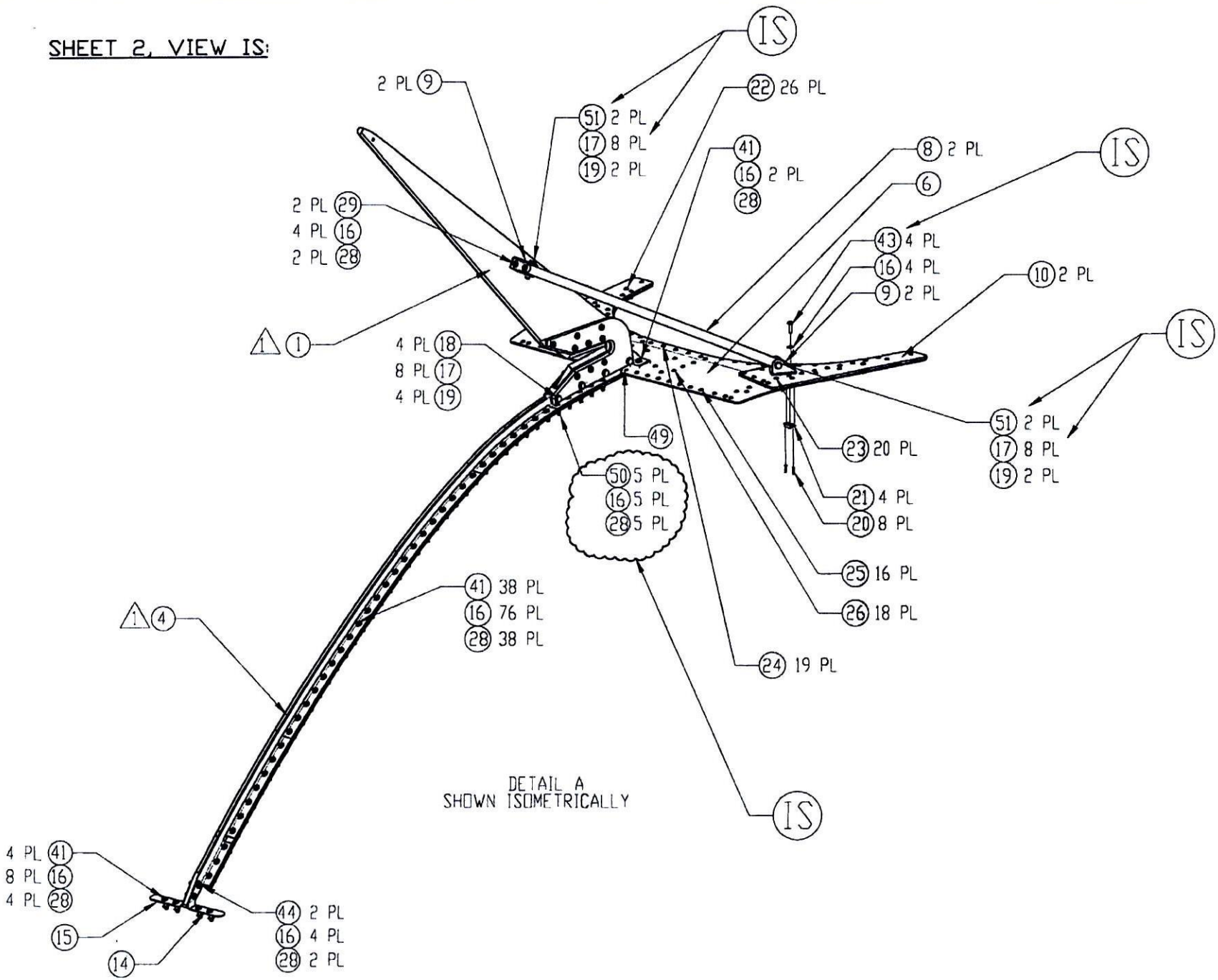

SHEET 3, ZONE B2, IS:

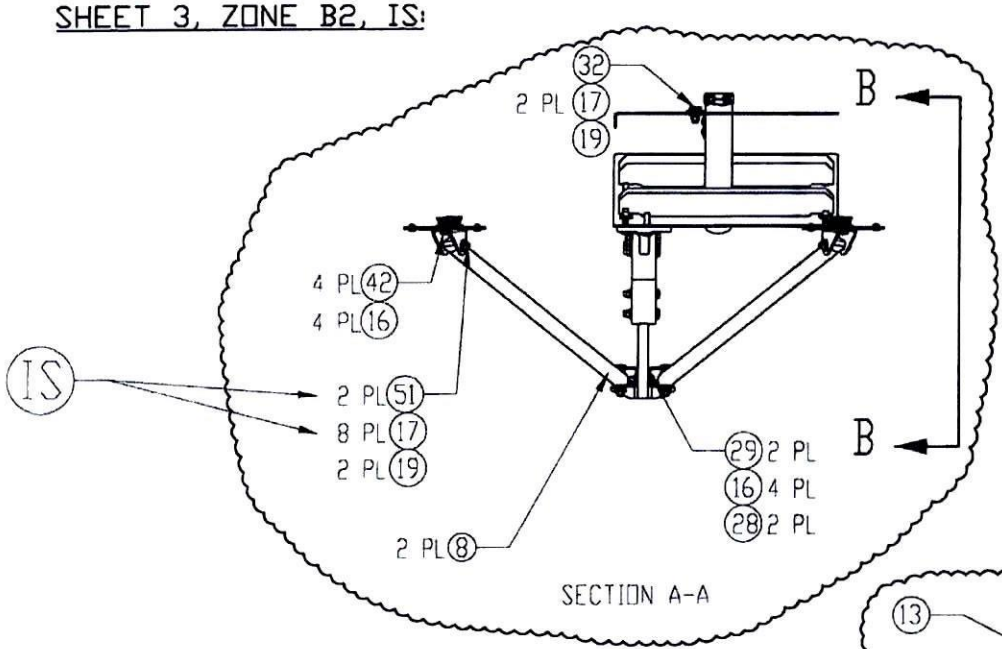

SHEET 3, ZONE D2, IS:

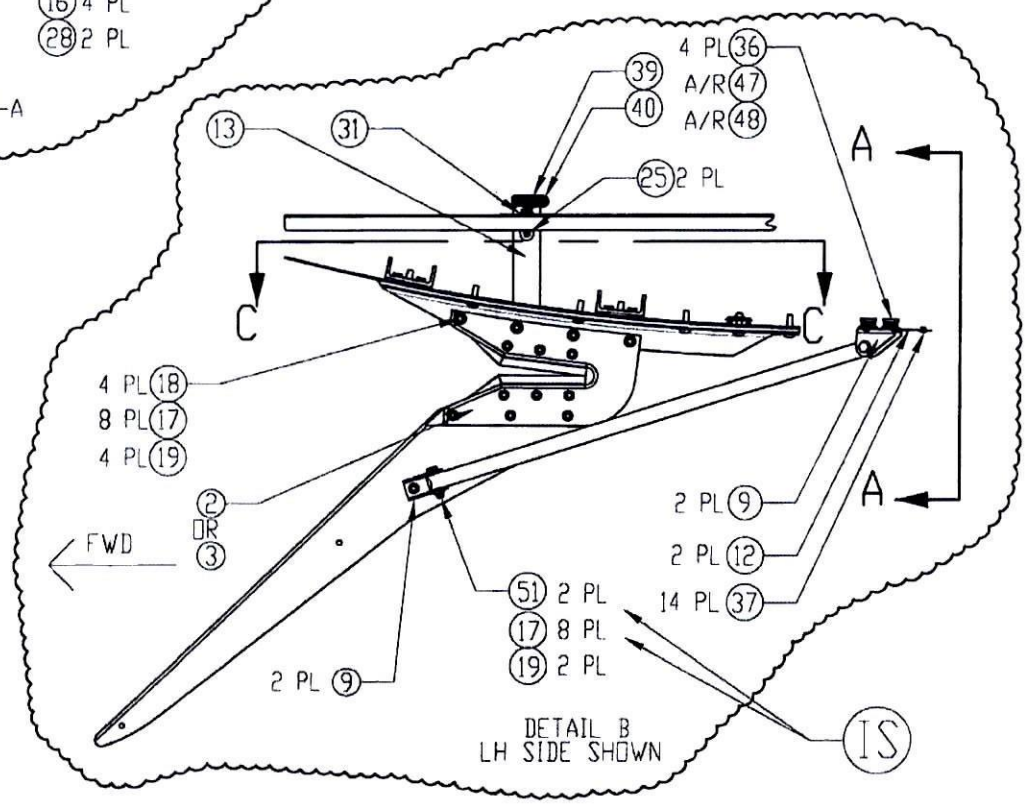

THE INFORMATION CONTAINED IN THIS DRAWING IS THE SOLE PROPERTY OF APICAL INDUSTRIES. ANY REPRODUCTION IN PART OR WHOLE WITHOUT THE WRITTEN PERMISSION OF APICAL INDUSTRIES IS PROHIBITED.

REVISIONS			
REV	DESCRIPTION	DATE	APPROVED
	LAST PROTOTYPE REVISION: PRE		N/C
N/C	INITIAL RELEASE	06/03/09	P. BRAVO

UNINCORPORATED ECN(s)

02729, 02736, 03047

NOTES:

1. AFTER INSTALLATION, APPLY F/N 46 A/R TO FILL GAPS AND FILLET EDGES

DETAIL A

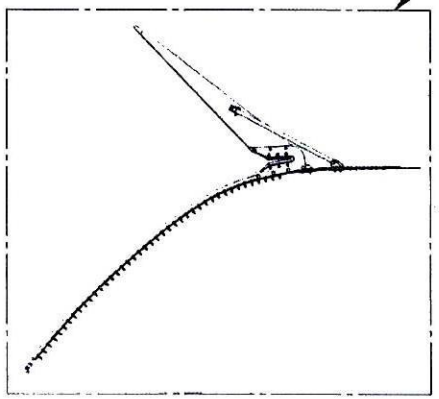

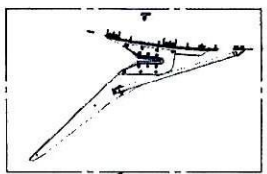

DETAIL B

SHOP COPY
RETURN TO
ENGINEERING
UNCONTROLLED COPY
SUBJECT TO AMENDMENT
WITHOUT NOTICE
WORK ORDER
NO. 165975

LM 8/14/17

QTY			FIND #	PART #	DESCRIPTION	MAT'L	SPEC.
1	1		49	601.1066	RIVET	CR3212-4-4	
1	1		48	600.0991	MAGNOBOND 6398 PART B		
1	1		47	600.0990	MAGNOBOND 6398 PART A		
1	1		46	600.1012	SEALANT	PP-1425 CLASS B	
5	5		45	601.1949	SCREW	MS27039-1-11	
2	2		44	601.2989	SCREW	MS27039-0812	
4	4		43	601.2987	SCREW	MS27039-0809	
4	4		42	601.3000	SCREW	MS27039-0806	
9502	9501		FIND #	PART #	DESCRIPTION	MAT'L	SPEC.

QTY			FIND #	PART #	DESCRIPTION	MAT'L	SPEC.
47	47		41	601.2893	SCREW	MS27039-0811	
1	1		40	601.2982	HOSE CLAMP	MS35842-11	
1	1		39	647.1210	SCREEN		
5	5		38	601.1621	SCREW	MS27039-1-08	
14	14		37	601.2979	RIVET	CP3213-4-1	
4	4		36	601.2984	INSERT	NAS1835-08	
4	4		35	601.2277	RIVET	CCR26455-3-02	
8	8		34	601.2983	RIVET	CR3212-5-4	
12	12		33	601.2980	NUTPLATE RIVET	CCR26455-3-04	
1	1		32	601.2822	BOLT	AN3-3A	
1	1		31	601.2985	BRACKET	AN743-13	
2	2		30	601.1900	NUTPLATE	MS21059-3	
6	6		29	601.2988	SCREW	MS27039-0813	
53	53		28	601.2973	LOCKNUT	MS21042-08	
6	6		27	600.0795	NUTPLATE	MS21047-3	
18	18		26	601.0790	RIVET	CR3213-4-3	
18	18		25	601.1039	RIVET	CP3213-4-2	
19	19		24	601.1915	RIVET	CR3213-4-4	
20	20		23	601.2991	RIVET	CR3213-4-6	
26	26		22	601.1183	RIVET	CR3213-4-5	
4	4		21	601.2356	NUTPLATE	MS21059L08	
8	8		20	601.2981	NUTPLATE RIVET	CCR26455-3-06	
17	17		19	601.2943	LOCKNUT	MS21042-3	
16	16		18	601.2826	BOLT	AN3-11A	
46	46		17	601.1607	WASHER	NAS1149F0332P	
114	114		16	601.2764	WASHER	NAS1149FN832P	
1	1		15	647.0115	CLIP		
1	1		14	647.0114	CLIP		
1	1		13	647.0410	TUBE		
2	2		12	647.0116	DOUBLER		
1	1		11	647.0111	PANEL		
2	2		10	647.0113	STRUT DOUBLER		
8	8		9	647.0112	STRUT BRACKET		
4	4		8	646.9910	STRUT		
2	2		7	647.0310	CHANNEL		
1	1		6	647.0110	ROOF DOUBLER		
1	1		5	647.0210	RAIL		
1	1		4	646.9810	DEFLECTOR		
1			3	646.9603	LOWER CUTTER ASSY LOW		
	1		2	646.9602	LOWER CUTTER ASSY HIGH		
1	1		1	646.9601	UPPER CUTTER ASSY		
X				646.9502	206 CABLE CUTTERS KIT LOW		
	X			646.9501	206 CABLE CUTTERS KIT HIGH		
9502	9501		FIND #	PART #	DESCRIPTION	MAT'L	SPEC.

PARTS LIST

NEXT ASSY (S)

ORIGINAL DATE 04-02-09
DRAWN BY P. ROSANO
CHECKED D. BARKER
DRAWING APPROVAL P. BRAVO 04-03-09
CONTRACT No

UNLESS OTHERWISE SPECIFIED DIMENSIONS ARE IN INCHES
TOLERANCES ARE
2 PLACE DECIMALS ±.01
3 PLACE DECIMALS ±.005
ANGLES ± 5°

APICAL INDUSTRIES
2608 TEMPLE HEIGHTS DR.
OCEANSIDE, CA. 92056-3512 (760)724-5300

206 CABLE CUTTERS KIT

SIZE	CAGE CODE	DWG NO	REV
B	07MZ6	646.9500	N/C

SCALE NONE SHEET 1 OF 3

THE INFORMATION CONTAINED IN THIS DRAWING IS THE SOLE PROPERTY OF APICAL INDUSTRIES. ANY REPRODUCTION IN PART OR WHOLE WITHOUT THE WRITTEN PERMISSION OF APICAL INDUSTRIES IS PROHIBITED

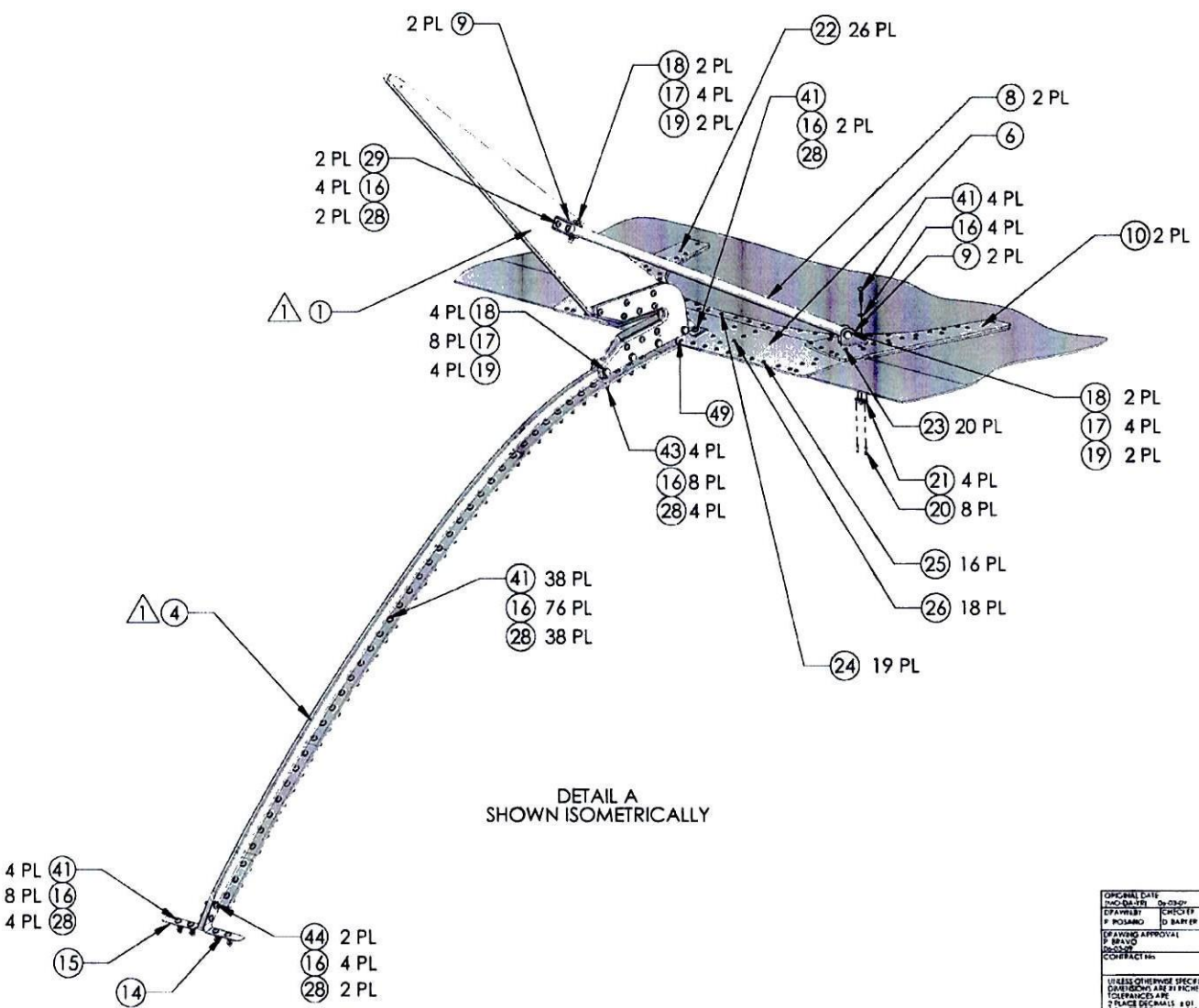

DETAIL A
SHOWN ISOMETRICALLY

ORIGINAL DATE	
DRAWN BY	CHECKED
P. ROSARIO	D. BARKER
DRAWING APPROVAL	
P. BRAVO	
CONTRACT No.	

UNLESS OTHERWISE SPECIFIED DIMENSIONS ARE IN INCHES
TOLERANCES ARE
2 PLACE DECIMALS ± .01
3 PLACE DECIMALS ± .005
ANGLES ± 1°

APICAL INDUSTRIES
2608 TEMPLE HEIGHTS DR.
OCEANSIDE, CA. 92056-3512 (760)724-5300

206 CABLE CUTTERS KIT

SIZE	CAGE CODE	DWG NO	REV
B	07M26	646.9500	N/C

SCALE NONE | SHEET 2 OF 3

THE INFORMATION CONTAINED IN THIS DRAWING IS THE SOLE PROPERTY OF APICAL INDUSTRIES ANY REPRODUCTION IN PART OR WHOLE WITHOUT THE WRITTEN PERMISSION OF APICAL INDUSTRIES IS PROHIBITED.

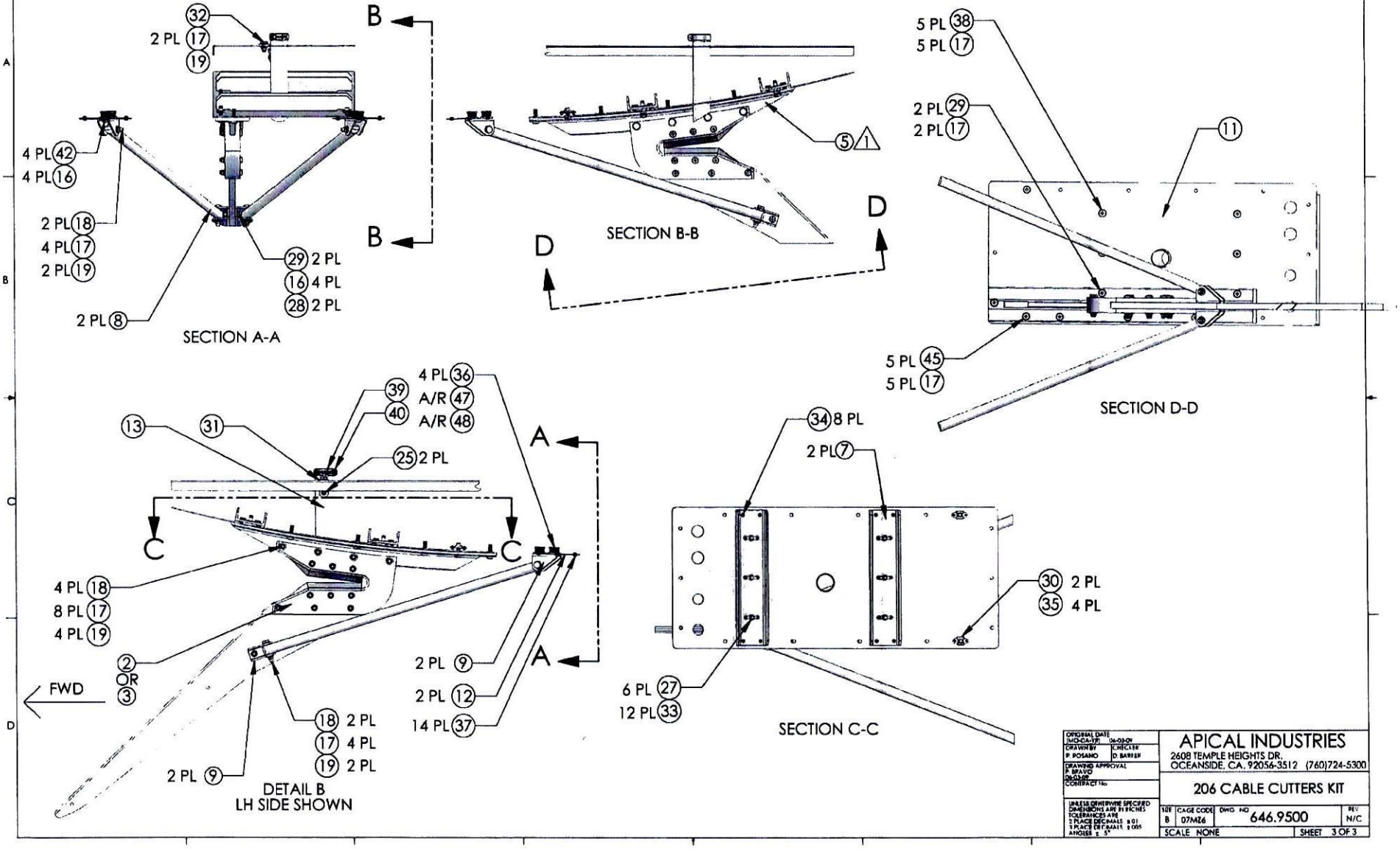

ORIGINAL DATE (MO-DA-YR) 06-03-09	APICAL INDUSTRIES
DRAWN BY P. POSANO / CHECKER D. BARKER	2608 TEMPLE HEIGHTS DR. OCEANSIDE, CA. 92056-3512 (760)724-5300
DRAWING APPROVAL P. BRAVO 06-03-09	206 CABLE CUTTERS KIT
CONTRACT No	
UNLESS OTHERWISE SPECIFIED DIMENSIONS ARE IN INCHES TOLERANCES ARE 2 PLACE DECIMALS ±.01 3 PLACE DECIMALS ±.005 ANGLES ± .5°	SIZE B / CAGE CODE 07MZ6 / DWG NO 646.9500 / REV N/C
	SCALE NONE / SHEET 3 OF 3

APICAL INDUSTRIES, INC.

ENGINEERING CHANGE NOTICE NO. 02736 | SHEET 1 OF 1

DWG NO. 646.9500 | REV: N/C | PREPARED BY S. HUFF | DATE: 01/06/10 | EFFECT ON DWG ☐ INC. ☒ UNINC.

DWG TITLE: 206 CABLE CUTTERS KIT

APPROVED BY: ENGR [signature] MFG [signature] QC [signature] EFF: CURRENT ORDER

TRANSACTION CODES (TC): A-ADD C-CREATE R-REVISE D-DELETE

REASON: CORRECTED PARTS LIST ERRORS

REFERENCE ONLY

F/N	TC	PART NUMBER	QTY		DESCRIPTION	MATERIAL/SPECIFICATION
17	R	601.1607	62	62	WASHER	NAS1149F0332P
16	R	601.2764	111	111	WASHER	NAS1149FN832P
			9502	9501		

DOCUMENTS EFFECTED: ☐ MDL ☒ INSTALL INSTRUC ☒ ICA ☐ FMS ☒ BOM

CHANGE CATEGORY ☐ MAJOR ☒ MINOR

DER REVIEW REQUIRED ☐ YES ☒ NO

APICAL INDUSTRIES, INC.

ENGINEERING CHANGE NOTICE NO. 02729 | SHEET 1 OF 3

DWG NO. 646.9500 | REV: N/C | PREPARED BY S. HUFF | DATE: 12/23/09 | EFFECT ON DWG ☐ INC. ☒ UNINC.

DWG TITLE: 206 CABLE CUTTERS KIT

APPROVED BY: ENGR [signature] MFG [signature] QC [signature] EFF: CURRENT ORDER

TRANSACTION CODES (TC): A-ADD C-CREATE R-REVISE D-DELETE

REASON: HARDWARE REVISIONS FROM FIRST INSTALL

REFERENCE ONLY

F/N	TC	PART NUMBER	QTY		DESCRIPTION	MATERIAL/SPECIFICATION
51	A	601.3155	8	8	BOLT	AN3-10A
50	A	601.3153	5	5	SCREW	MS24694S8
41	R	601.2893	43	43	SCREW	MS27039-0811
28	R	601.2973	54	54	LOCKNUT	MS21042-08
18	R	601.2826	8	8	BOLT	AN3-11A
16	R	601.2764	127	127	WASHER	NAS1149FN832P
			9502	9501		

DOCUMENTS EFFECTED: ☐ MDL ☒ INSTALL INSTRUC ☒ ICA ☐ FMS ☒ BOM

CHANGE CATEGORY ☐ MAJOR ☒ MINOR

DER REVIEW REQUIRED ☐ YES ☒ NO

REFERENCE ONLY

THE INFORMATION CONTAINED IN THIS DRAWING IS THE SOLE PROPERTY OF APICAL INDUSTRIES. ANY REPRODUCTION IN PART OR WHOLE WITHOUT THE WRITTEN PERMISSION OF APICAL INDUSTRIES IS PROHIBITED.

REVISIONS			
REV.	DESCRIPTION	DATE	APPROVED
	LAST PROTOTYPE REVISION PRIOR		N/C
N/C	INITIAL RELEASE	06/03/09	P BRAVO

UNINCORPORATED ECN(s)

02729, 02736, 03047

NOTES:

1. AFTER INSTALLATION, APPLY F/N 46 A/R TO FILL GAPS AND FILLET EDGES

DETAIL A

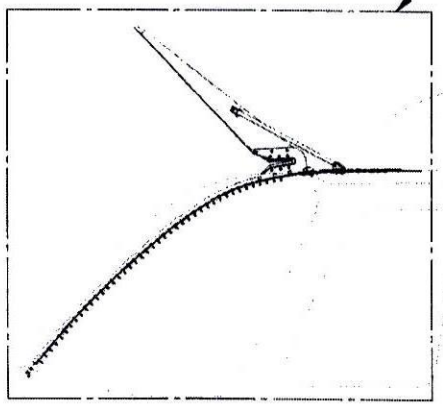

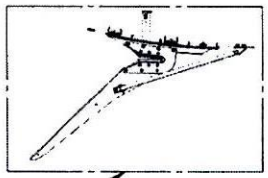

DETAIL B

	1	1	49	601.1066	RIVET	CR3212-4-4	
	1	1	48	600.0991	MAGNOBOND 6398 PART B		
	1	1	47	600.0990	MAGNOBOND 6398 PART A		
	1	1	46	600.1012	SEALANT	PR-1428 CLASS B	
	5	5	45	601.1949	SCREW	MS27039-1-11	
	2	2	44	601.2989	SCREW	MS27039-0812	
	4	4	43	601.2987	SCREW	MS27039-0809	
	4	4	42	601.3000	SCREW	MS27039-0806	
	9502	9501	FIND #	PART #	DESCRIPTION	MAT'L	SPEC.

	47	47	41	601.2893	SCREW	MS27039-0811	
	1	1	40	601.2982	HOSE CLAMP	MS35842-11	
	1	1	39	647.1210	SCREEN		
	5	5	38	601.1621	SCREW	MS27039-1-08	
	14	14	37	601.2979	RIVET	CR3213-4-1	
	4	4	36	601.2984	INSERT	NAS1835-08	
	4	4	35	601.2277	RIVET	CCR26455-3-09	
	8	8	34	601.2983	RIVET	CR3212-5-4	
	12	12	33	601.2980	NUTPLATE RIVET	CCR26455-3-04	
	1	1	32	601.2822	BOLT	AN3-3A	
	1	1	31	601.2985	BRACKET	AN743-13	
	2	2	30	601.1900	NUTPLATE	MS21059-3	
	6	6	29	601.2988	SCREW	MS27039-0813	
	53	53	28	601.2973	LOCKNUT	MS21042-08	
	6	6	27	600.0795	NUTPLATE	MS21047-3	
	18	18	26	601.0790	RIVET	CR3213-4-3	
	18	18	25	601.1039	RIVET	CR3213-4-2	
	19	19	24	601.1915	RIVET	CR3213-4-4	
	20	20	23	601.2991	RIVET	CR3213-4-6	
	26	26	22	601.1183	RIVET	CR3213-4-5	
	4	4	21	601.2356	NUTPLATE	MS21059L08	
	8	8	20	601.2981	NUTPLATE RIVET	CCR26455-3-04	
	17	17	19	601.2943	LOCKNUT	MS21042-3	
	16	16	18	601.2826	BOLT	AN3-11A	
	46	46	17	601.1607	WASHER	NAS1149F0832P	
	114	114	16	601.2764	WASHER	NAS1149FN832P	
	1	1	15	647.0115	CLIP		
	1	1	14	647.0114	CLIP		
	1	1	13	647.0410	TUBE		
	2	2	12	647.0116	DOUBLER		
	1	1	11	647.0111	PANEL		
	2	2	10	647.0113	STRUT DOUBLER		
	8	8	9	647.0112	STRUT BRACKET		
	4	4	8	646.9910	STRUT		
	2	2	7	647.0310	CHANNEL		
	1	1	6	647.0110	ROOF DOUBLER		
	1	1	5	647.0210	RAIL		
	1	1	4	646.9810	DEFLECTOR		
	1		3	646.9603	LOWER CUTTER ASSY LOW		
		1	2	646.9602	~~LOWER CUTTER ASSY HIGH~~		
	1	1	1	646.9601	UPPER CUTTER ASSY		
	X			646.9502	206 CABLE CUTTERS KIT LOW		
	X			646.9501	206 CABLE CUTTERS KIT HIGH		
	9502	9501	FIND #	PART #	DESCRIPTION	MAT'L	SPEC.

QTY — PARTS LIST

NEXT ASSY (S)

ORIGINAL DATE 06-04-09 — DRAWN BY: W. ROSARIO — CHECKED: D. BARTLEY — DRAWING APPROVAL: P. BRAVO 06-03-09 — CONTRACT No.

UNLESS OTHERWISE SPECIFIED DIMENSIONS ARE IN INCHES. TOLERANCES ARE: 2 PLACE DECIMALS ± .01, 3 PLACE DECIMALS ± .005, ANGLES ± .5°

APICAL INDUSTRIES
2608 TEMPLE HEIGHTS DR.
OCEANSIDE, CA. 92056-3512 (760)724-5300

206 CABLE CUTTERS KIT

SIZE B — CAGE CODE 07MZ6 — DWG NO 646.9500 — REV N/C

SCALE NONE — SHEET 1 OF 3

Dart Aerospace Ltd.
1270 Aberdeen St
Hawkesbury, ON
K6A 1K7
Canada

Tel (613) 632-5200

Master Unit 000058

Containers on Master Unit 000058				
Serial No	Part No	Customer Part No	Status	Quantity
S035185	600.0990	600.0990	Allocated	1
S035184	600.0991	600.0991	Allocated	1
S035183	600.1012		Allocated	1
S025937	646.9601	646.9601	Allocated	1
S035182	646.9810		Allocated	1
S035181	647.0110		Allocated	1
S035180	647.0111		Allocated	1
S035179	647.0112	647.0112	Allocated	8
S035178	647.0113		Allocated	2
S035177	647.0114		Allocated	1
S035176	647.0115		Allocated	1
S035175	647.0116	647.0116	Allocated	2
S035174	647.0210	647.0210	Allocated	1
S035171	647.0310	647.0310	Allocated	2
S035170	647.0410		Allocated	1
S035169	647.1210		Allocated	1
S035166	AN3-10A	AN3-10A	Allocated	8
S035165	AN3-11A		Allocated	8
S035149	AN3-3A	AN3-3A	Allocated	1
S035139	AN743-13		Allocated	1
S035135	CCR264SS-3-06		Allocated	8
S035131	CCR264SS3-02		Allocated	4
S035134	CCR264SS3-04		Allocated	12
S035128	CR3212-4-04		Allocated	1
S035120	CR3212-5-4		Allocated	8
S035119	CR3213-4-05		Allocated	26
S035117	CR3213-4-1	CR3213-4-1	Allocated	14
S035116	CR3213-4-2	CR3213-4-2	Allocated	18
S035113	CR3213-4-3		Allocated	18
S035112	CR3213-4-4		Allocated	19
S035111	CR3213-4-6		Allocated	20
S035110	MS21042L08		Allocated	54
S035107	MS21042L3	MS21042L3	Allocated	17

exp. 06/2018
exp. 03/2018

S035106	MS21047-3		Allocated	6
S035103	MS21059-3		Allocated	2
S035102	MS21059L08		Allocated	4
S035101	MS24694-S8		Allocated	6
S035100	MS27039-08-06		Allocated	4
S035098	MS27039-08-09		Allocated	4
S035097	MS27039-08-11		Allocated	43
S035095	MS27039-08-12		Allocated	2
S035093	MS27039-08-13	MS27039-08-13	Allocated	6
S035090	MS27039-1-08		Allocated	5
S035088	MS27039-1-11		Allocated	5
S035086	MS35842-11		Allocated	1
S035085	NAS1149F0332P		Allocated	62
S035084	NAS1149FN832P		Allocated	11
S035082	NAS1835-08		Allocated	4

646.9910 ~~S026~~ 5036431 4x